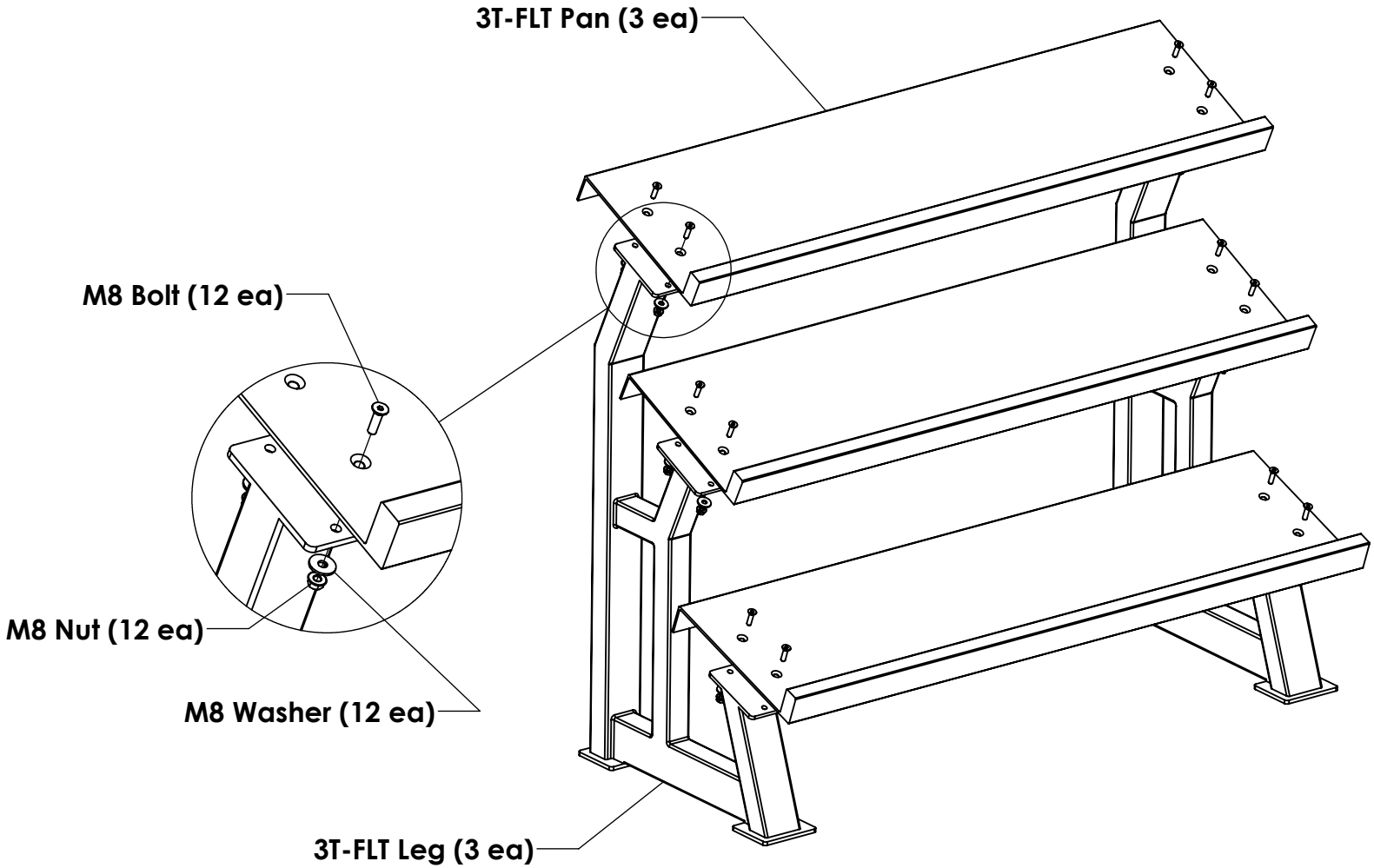

Assembly Diagram for 3T-FLT Dumbbell Rack